Shower Tray with Enclosure Kit - A

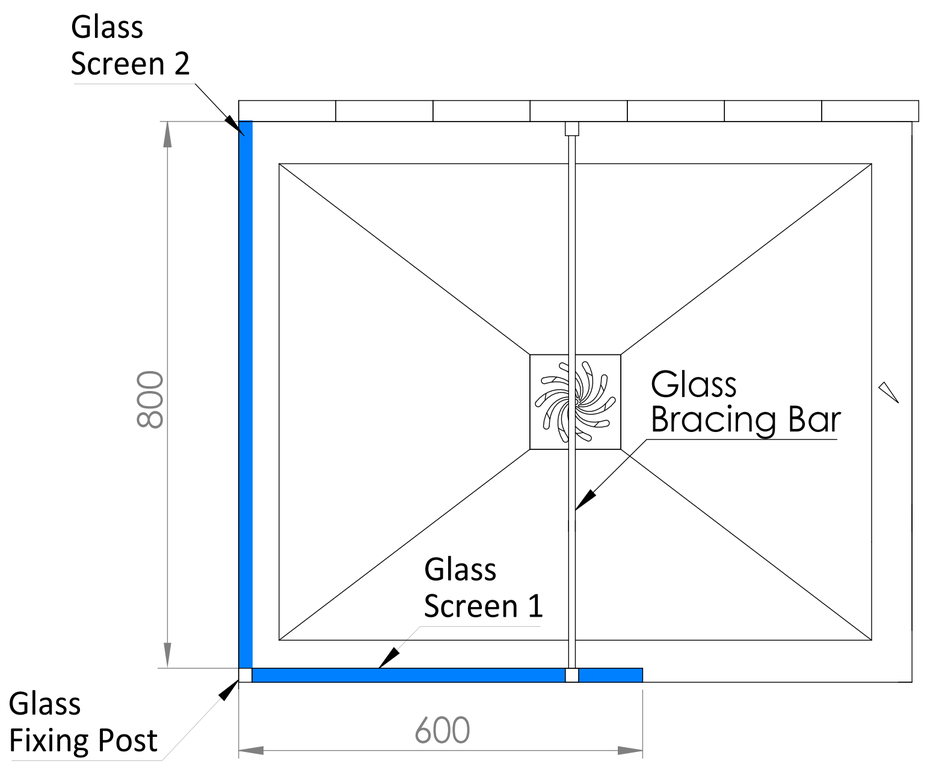

Shower Tray - Top View

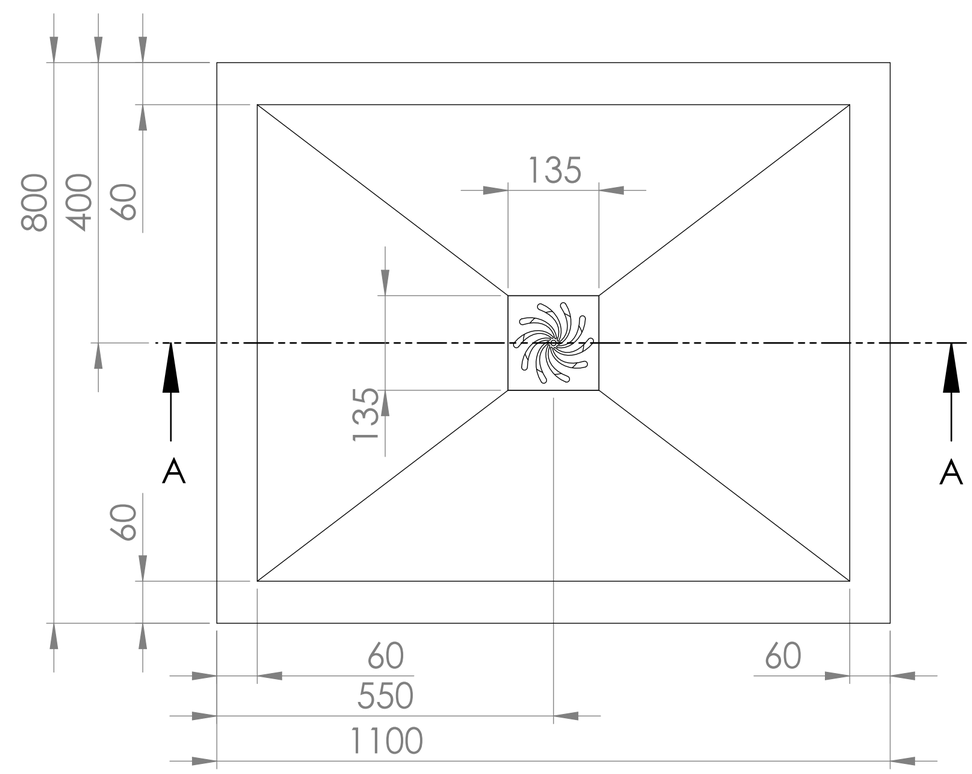

Section View A - A

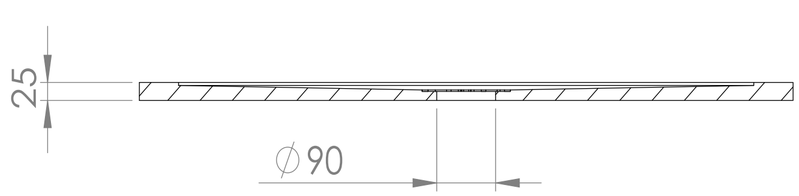

Waste Kit - Side View

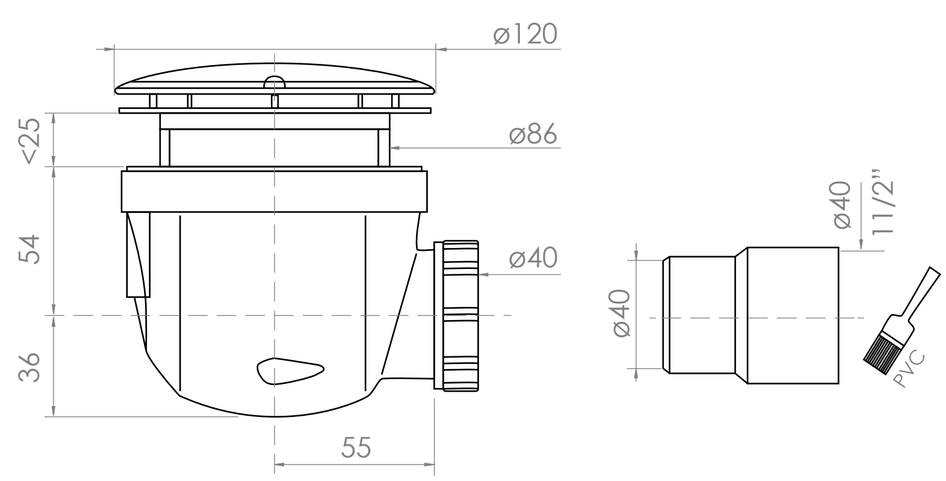

LUSSO	Product Name	Designo Kit C
	Size, mm	1100 x 800
	Contains	Shower Tray Shower Waste 2x Glass Panels 2x Glass-Wall Fixing Kit Glass Bracing Bar

All dimensions provided in mm.